303 100

Work Order ID 73472

Thursday, September 01, 2011 7:37:48 AM

Item ID: D3909-5 **Accept** **Setup Start** **Stop**

Revision ID:

Item Name: Eyebolt Stud

Start Date: 8/31/2011 **Start Qty:** 8.00 **Cust Item ID:**

Required Date: 9/16/2011 **Req'd Qty:** 8.00 **Customer:**

Reference:

Approvals: **Process Plan:** _____ **Date:** _____ **Tooling:** _____ **Date:** _____ **Run Start**

QC: _____ **Date:** _____ **SPC (Y/N):** _____ **Date:** _____ **Stop**

Sequence ID/ Work Center ID	Operation Description	Set Up/ Run Hours	Tool ID	Tool #	Plan Code	Accept Qty	Reject Qty	Reject Number	Insp. Stamp
Draw Nbr	**Revision Nbr**								
D3909	C								
100		0.00				8	ϕ		
Doosan	**Memo**	0.00							
Doosan Lathe	turn as per dwg and folio FA872 DWG REV: C FOLIO REV:	11/9/28							
	DEBURR								
110	QC2- Inspect parts off machine FAI/FAIB	0.00				8	ϕ		
QC	**Memo**	0.00							
Quality Control		11/9/28							

Dart Aerospace Ltd

W/O:		WORK ORDER CHANGES					
DATE	STEP	PROCEDURE CHANGE	By	Date	Qty	Approval Chief Eng / Prod Mgr	Approval QC Inspector

Part No: _____ **PAR #:** _____ **Fault Category:** _____ **NCR:** Yes No **DQA:** _____ **Date:** _____

Resolution: _____ **Disposition:** _____ **QA: N/C Closed:** _____ **Date:** _____

NCR:		WORK ORDER NON-CONFORMANCE (NCR)						
DATE	STEP	Description of NC Section A	Corrective Action Section B			Verification Section C	Approval Chief Eng	Approval QC Inspector
			Initial Chief Eng	Action Description Chief Eng	Sign & Date			

NOTE: Date & initial all entries

H:\FORMS\Quality Assurance\approved QA\NCRWO RevE

Work Order ID 73472

Thursday, September 01, 2011 7:37:48 AM

Item ID: D3909-5 **Accept** **Setup Start** **Stop**

Revision ID:

Item Name: Eyebolt Stud

Start Date: 8/31/2011 **Start Qty:** 8.00 **Cust Item ID:**

Required Date: 9/16/2011 **Req'd Qty:** 8.00 **Customer:**

Reference:

Run Start **Stop**

Approvals: **Process Plan:** _____ **Date:** _____ **Tooling:** _____ **Date:** _____

QC: _____ **Date:** _____ **SPC (Y/N):** _____ **Date:** _____

Sequence ID/ Work Center ID	Operation Description	Set Up/ Run Hours	Tool ID	Tool #	Plan Code	Accept Qty	Reject Qty	Reject Number	Insp. Stamp
120	QC8- Inspect parts - second check	0.00	JL 11-09-28						
QC	Memo	0.00							
Quality Control									
150	Identify as per dwg & Stock Location: 91	0.00				11/9/29			
Packaging	Memo	0.00							
Packaging									
160	QC21- Final Inspection - Work Order Release	0.00						11/10/3	
QC	Memo	0.00							
Quality Control									

MF 11-09-29

Dart Aerospace Ltd

W/O:		WORK ORDER CHANGES					
DATE	STEP	PROCEDURE CHANGE	By	Date	Qty	Approval Chief Eng / Prod Mgr	Approval QC Inspector

Part No: _____ **PAR #:** _____ **Fault Category:** _____ **NCR:** Yes No **DQA:** _____ **Date:** _____

Resolution: _____ **Disposition:** _____ **QA: N/C Closed:** _____ **Date:** _____

NCR:		WORK ORDER NON-CONFORMANCE (NCR)						
DATE	STEP	Description of NC Section A	Corrective Action Section B			Verification Section C	Approval Chief Eng	Approval QC Inspector
			Initial Chief Eng	Action Description Chief Eng	Sign & Date			

NOTE: Date & initial all entries

H:\FORMS\Quality Assurance\approved QA\NCRWO RevE

Picklist Print

Thursday, September 01, 2011 7:37:46 AM

Work Order ID: 73472

Parent Item: D3909-5

Parent Item Name: Eyebolt Stud

Start Date: 8/31/2011 **Required Date:** 9/16/2011

Start Qty: 8.00 **Required Qty:** 8.00

Comments: IPP REV:A NEW ISSUE 09-11-25 JLM VERIFIED BY:DD IPP Rev:B
as per dwg revB DD 10.04.20 verified by:EC

Component Item ID/ Item Name	Replacement Item ID	Mfg/ Purch	Bin Item	Primary Location	Last Location	Route Seq ID	Unit of Measure	Qty on Hand	Qty per Kit	Total Qty	Qty Issued	Date Issued	Status
M303R1.000 303 Round Bar 1.00		Purchased	No			100	f	34.5390	0.25	2.105263			

Location	Loc Qty	Loc Code
MAT028	34.539	
116700	1.107	
~~117550~~	6.9	
117598	13.74	
~~118008~~	12.792	

Dart Aerospace Ltd

W/O:		WORK ORDER CHANGES					
DATE	STEP	PROCEDURE CHANGE	By	Date	Qty	Approval Chief Eng / Prod Mgr	Approval QC Inspector

Part No: _____ **PAR #:** _____ **Fault Category:** _____ **NCR:** Yes No **DQA:** _____ **Date:** _____

Resolution: _____ **Disposition:** _____ **QA: N/C Closed:** _____ **Date:** _____

NCR:		WORK ORDER NON-CONFORMANCE (NCR)						
DATE	STEP	Description of NC Section A	Corrective Action Section B			Verification Section C	Approval Chief Eng	Approval QC Inspector
			Initial Chief Eng	Action Description Chief Eng	Sign & Date			

NOTE: Date & initial all entries

H:\FORMS\Quality Assurance\approved QA\NCRWO RevE

DART AEROSPACE LTD	Work Order:	73472
Description: Eyebolt Stud	Part Number:	D3909-5
Inspection Dwg: D3909 Rev: C		Page 1 of 1

FIRST ARTICLE INSPECTION CHECKLIST

Drawing Dimension	Tolerance	Actual Dimension	Accept	Reject	Method of Inspection	Comments
Ø0.129	+0.005/-0.001	.132	✓		VM-9	
1.38	+/-0.030	1.385	✓			
0.400	+0.000/-0.010	.392	✓			
0.700	+0.010/-0.000	.694	✓			
R0.030	+/-0.010	R.031	✓			
Ø0.375	+0.000/-0.020	.370	✓			
Ø0.700	+0.000/-0.010	.694	✓			
0.250	+/-0.010	.250	✓			
1.50	+/-0.030	1.500	✓			
R0.06	+/-0.030	R.06	✓			
2.88	+/-0.030	2.888	✓			
0.310	+/-0.010	.310	✓			
0.750	+/-0.010	.750	✓			
0.375 Pitch	+/-0.010	.375	✓			
Ø1.00	+/-0.030	.999	✓			
0.75	+/-0.030	.748	✓			
0.735	+0.010/-0.000	.738	✓			

Measured by:		Audited by:		Preliminary Approval:	
Date:	11/9/28	Date:	11-09-28	Date:	

Rev	Date	Change	Revised by	Approved
A	10.04.20	New Issue	KJ	
B	10.11.05	Dimensions updated per Dwg Rev C	KJ	

ITEM	QTY -041	P/N	DESCRIPTION
	X	D3909-041	FWD X-TUBE LUG ASSY
1	1	D2690-6	LANYARD
2	2	D3909-1	FWD X-TUBE LUG PLATE
3	1	D3909-3	FWD LOWER ATTACH ARM
4	1	D3909-5	EYEBOLT STUD
5	2	D3910-1	X-TUBE LUG
6	2	D3917-1	WASHER
7	4	AN3C12A	BOLT
8	1	AN3C13	BOLT
9	1	MS17984-C413	PIP PIN
10	3	MS20615-4M20	RIVET
11	1	AN310C3	NUT - CASTELLATED
12	4	MS21043-3	NUT
13	1	MS24665-151	COTTER PIN
14	8	NAS1149C0332R	WASHER
15	2	NAS1149C0363R	WASHER

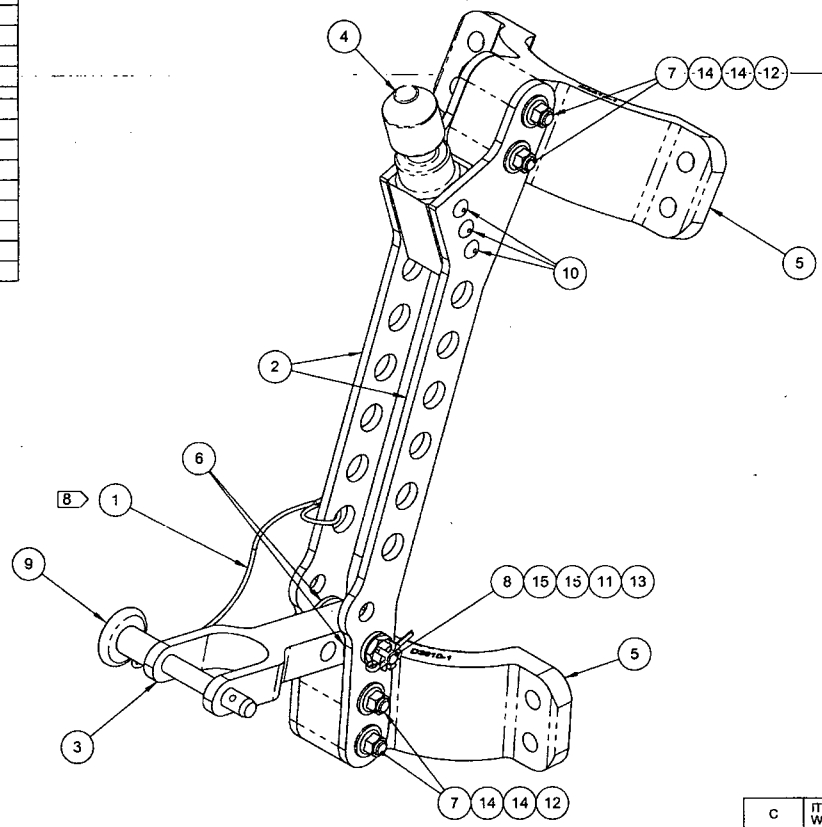

SHOP COPY
RETURN TO
ENGINEERING
UNCONTROLLED COPY
SUBJECT TO AMENDMENT
WITHOUT NOTICE
WORK ORDER
NO. 73472
CL11109/01

RELEASED
2010 -08- 04

D3909-041 FWD X-TUBE LUG ASSY

NOTES:
1) MATERIAL: N/A
2) FINISH: NONE
3) TOLERANCES: PER DART QSI 018 UNLESS OTHERWISE NOTED
4) UNITS: INCHES UNLESS OTHERWISE NOTED
5) BREAK SHARP EDGES: 0.005 TO 0.010 MAX
6) IDENTIFICATION: IDENTIFY WITH DART P/N "D3909-041" USING FINE POINT PERMANENT INK MARKER
7) WEIGHT: 1.81 lbs (C)
8) ATTACH D2690-6 TO D3909-1 BY LOOPING AROUND LIGHTENING HOLE FIRST AND THEN SECURE TO MS17984-C413 PIP PIN'S RING

REV.	DESCRIPTION	BY	DATE
C	ITEM #4: 1.50 WAS 1.30 (ZN B5-5), 2.88 WAS 2.68 (ZN B6-5); WEIGHT AFFECTED (D3909-041/-5).	MB	10.06.18
B	BOM: ADDED ITEM 15 QTY 2 NAS1149C0363R ADDED, ITEM 14 QTY 8 WAS 10. SHT 5, D3909-5 REVISED: SECTION A-A & DIM Ø0.650 REMOVED. SIDE VIEW ADDED. DIM: 2.68 WAS 2.38 REF, 1.30 WAS 1.00, 0.250 WAS 0.220, R0.06 WAS R0.05, WEIGHT REVISED.	JPH	10.04.06
A	NEW ISSUE	JPH	10.03.04

DESIGN	JPH	DART AEROSPACE LTD HAWKESBURY, ONTARIO, CANADA
DRAWN		
CHECKED		DRAWING NO. D3909 — REV. C — SHEET 1 OF 5
MFG. APPR.		
APPROVED		TITLE: FWD X-TUBE LUG ASSY — SCALE: NTS
DE APPR.		
DATE	10.06.18	

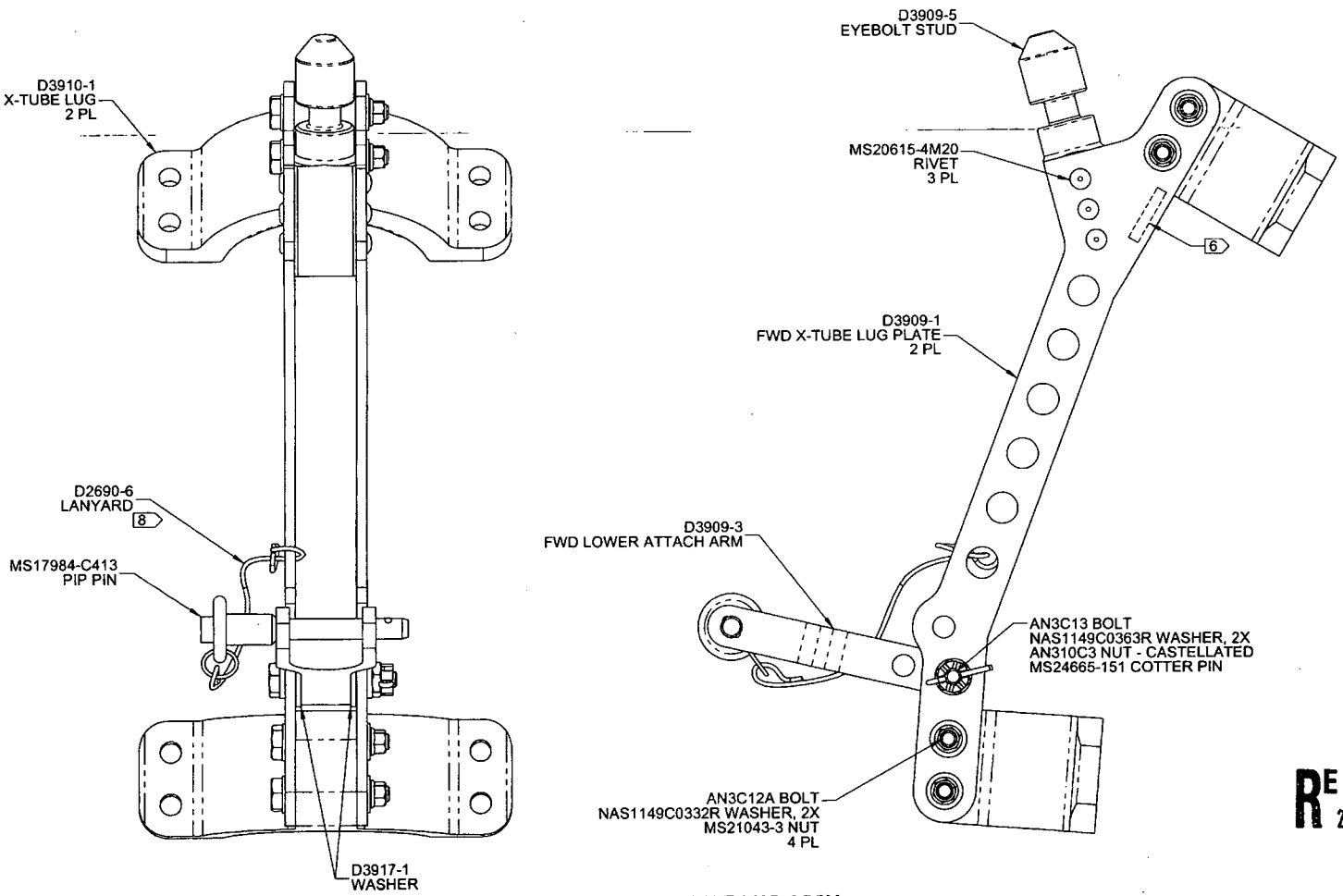

RELEASED
2010 -08- 04

D3909-041 FWD X-TUBE LUG ASSY

DESIGN	JPH	**DART AEROSPACE LTD** HAWKESBURY, ONTARIO, CANADA
DRAWN		
CHECKED		DRAWING NO. D3909 — REV. C — SHEET 2 OF 5
MFG. APPR.		
APPROVED		TITLE: FWD X-TUBE LUG ASSY — SCALE: NTS
DE APPR.		
DATE	10.06.18	

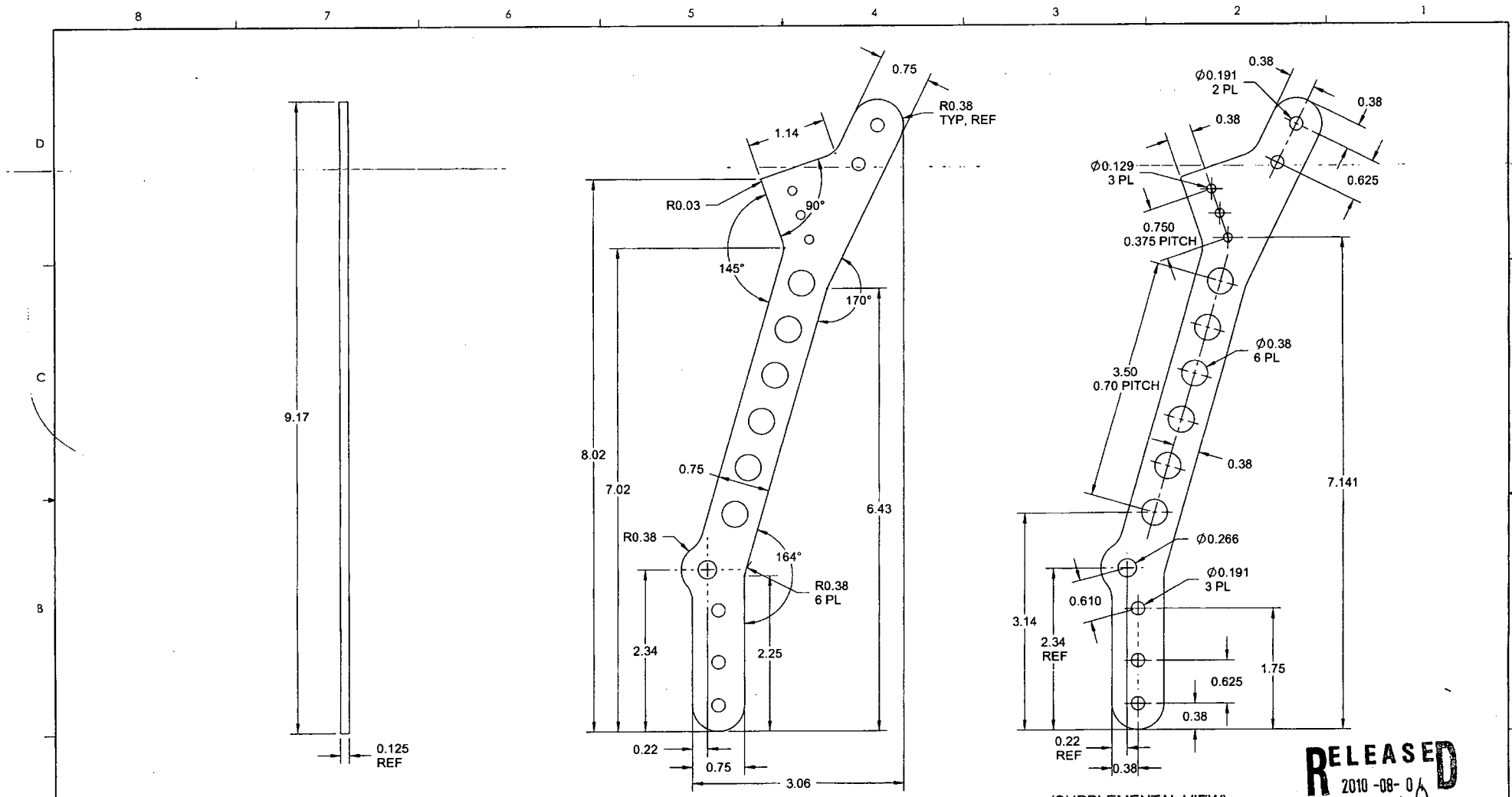

D3909-1 FWD X-TUBE LUG PLATE

(SUPPLEMENTAL VIEW)

RELEASED
2010 -08- 0
MAD

NOTES:
1) MATERIAL: 303/304/316 STAINLESS STEEL 0.125" THICK SHEET ANNEALED 2B, PER MIL-S-5059 OR AMS 5513/5524 OR ASTM A240 OR ASME SA240 PER DART SPEC M303S11GA OR M304S11GA
2) FINISH: NONE
3) TOLERANCES: PER DART QSI 018 UNLESS OTHERWISE NOTED
4) UNITS: INCHES UNLESS OTHERWISE NOTED
5) BREAK SHARP EDGES: 0.005 TO 0.010 MAX
6) IDENTIFICATION: NONE
7) WEIGHT: 0.25 lbs

DESIGN	JPH	**DART AEROSPACE LTD** HAWKESBURY, ONTARIO, CANADA
DRAWN		
CHECKED		DRAWING NO. D3909 — REV. C — SHEET 3 OF 5
MFG. APPR.		
APPROVED		TITLE FWD.X-TUBE LUG ASSY. — SCALE NTS
DE APPR.		
DATE	10.06.18	

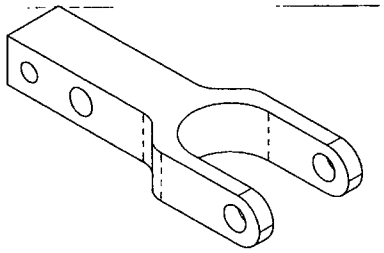

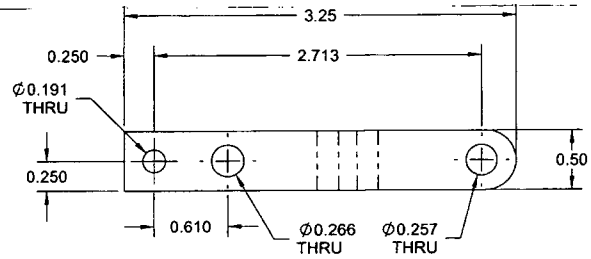

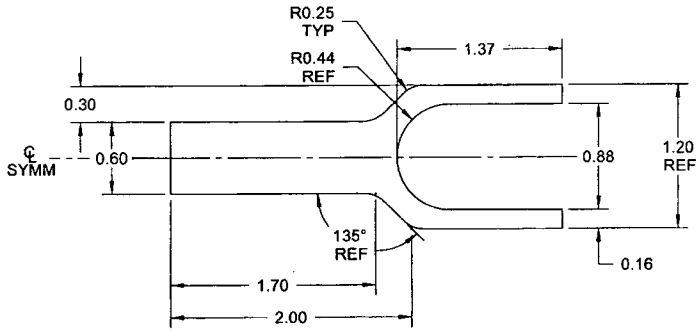

D3909-3 FWD LOWER ATTACH ARM

RELEASED
2010 -08- 0

NOTES:
1) MATERIAL: 303/304/316 STAINLESS STEEL BAR, PER ASTM A582 OR ASTM A276
PER DART SPEC M303B OR M304B
2) FINISH: NONE
3) TOLERANCES: PER DART QSI 018 UNLESS OTHERWISE NOTED
4) UNITS: INCHES UNLESS OTHERWISE NOTED
5) BREAK SHARP EDGES: 0.005 TO 0.010 MAX
6) IDENTIFICATION: NONE
7) WEIGHT: 0.22 lbs

DESIGN	JPH	**DART AEROSPACE LTD** HAWKESBURY, ONTARIO, CANADA
DRAWN		DRAWING NO. D3909 — REV. C — SHEET 4 OF 5
CHECKED		TITLE: FWD X-TUBE LUG ASSY — SCALE: NTS
MFG. APPR.		
APPROVED		
DE APPR:		
DATE	10.06.18	

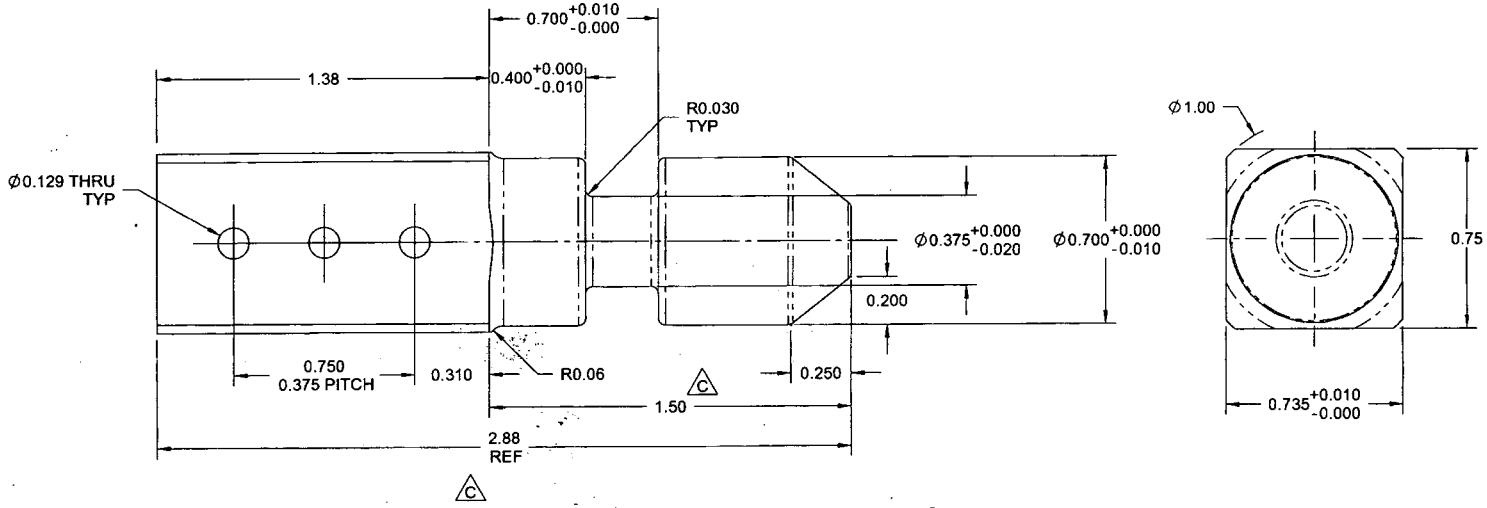

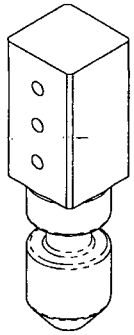

D3909-5 EYEBOLT STUD

RELEASED
2010 -08- 04

NOTES:
1) MATERIAL: 303/304/316 STAINLESS STEEL ROUND BAR PER ASTM A582 OR ASTM A276 PER DART SPEC M303R OR M304R
2) FINISH: NONE
3) TOLERANCES: PER DART QSI 018 UNLESS OTHERWISE NOTED
4) UNITS: INCHES UNLESS OTHERWISE NOTED
5) BREAK SHARP EDGES: 0.005 TO 0.010 MAX
6) IDENTIFICATION: IDENTIFY WITH DART P/N "D3909-5" USING FINE POINT PERMANENT INK MARKER
7) WEIGHT: 0.34 lbs

C

DESIGN	JPH	DART AEROSPACE LTD HAWKESBURY, ONTARIO, CANADA
DRAWN		
CHECKED		DRAWING NO. D3909 — REV. C — SHEET 5 OF 5
MFG. APPR.		
APPROVED		TITLE: FWD X-TUBE LUG ASSY — SCALE: NTS
DE APPR.		
DATE	10.06.18	